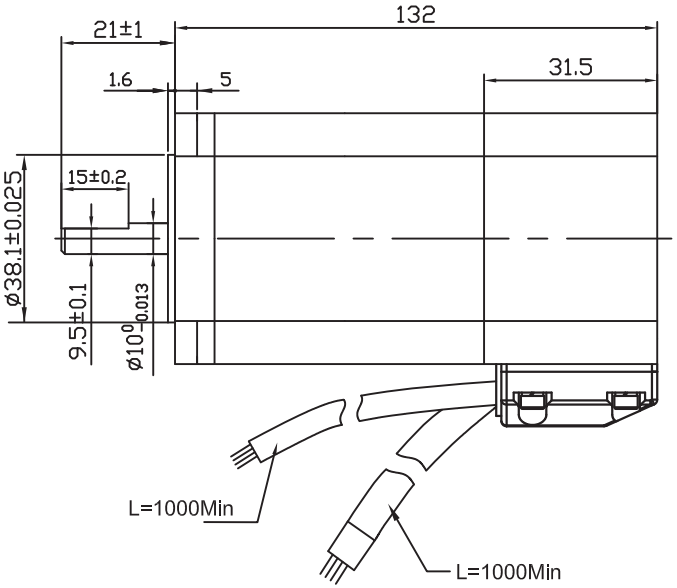

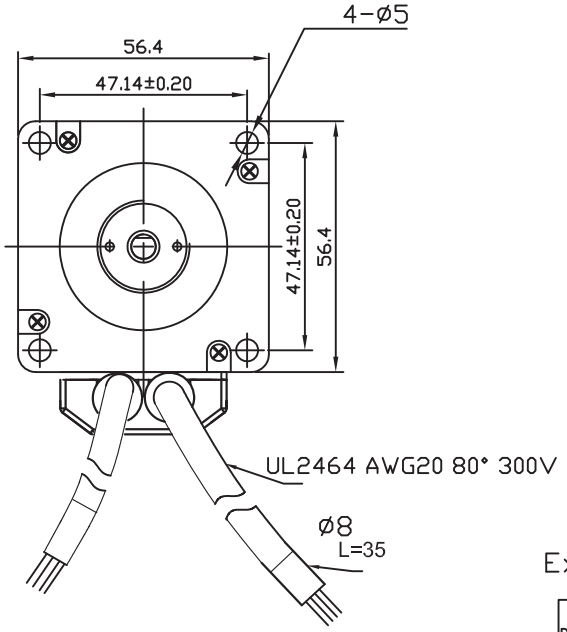

Wiring Diagram

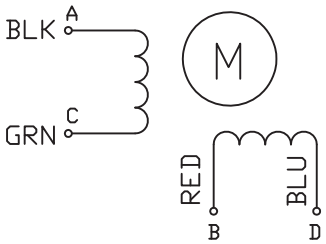

Exciting Sequence

CW DIRECTION	STEP	A	C	B	D
⇩	1	+		+	
	2		+	+	
	3		+		+
	4	+			+
	1	+		+	

CW,see from flange side

SPECIFICATION

STEP ANGLE	1.8°/full step
STEP ANGLE ACCURACY	±5%
NUMBER OF PHASE	4
RATED VOLTAGE	3.19VDC
RATED CURRENT	5.6A
RESISTANCE/PHASE	0.57±15% ohms@20°C
INDUCTANCE/PHASE	2.2±20% mH@1kHz
HOLDING TORQUE	3.0N.m 2 phase on
PULL OUT TORQUE	N.m@ RPM
BACK EMF	V @300RPM
DETENT TORQUE	N.cm
ROTOR INERTIA	650 g.cm²
WEIGHT	1.75kg
TEMPERATURE RISE	Less than 80K
SOURCE VOLTAGE	24--48 VDC
INSULATION CLASS	B 130°C
DIELECTRIC STRENGTH	500VAC 1MIN
INSULATION RESISITANCE	100MOhm @500VDC
IP CODE	IP30
OPERATION AMBIENT	Ambient temperature:-25...+40°C,humidity Max. 85%(No condensation)
STORAGE AMBIENT	Ambient temperature:-10...+35°C,humidity Max. 85%(No condensation)

PERMISSIBLE RADIAL+AXIAL FORCE

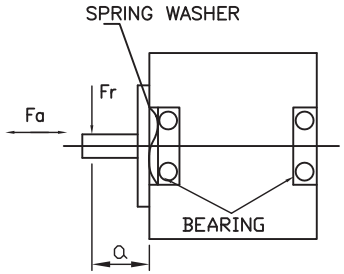

AXIAL-FORCE	Fa=15 N Max.
RADIAL-FORCE	Fr=75 N Max.
DISTANCE	a=20 mm
SHAFT RADIAL PLAY	0.02mm Max. @4N
SHAFT AXIAL PLAY	0.08mm Max. @4N

REV	ECN NO.	DESCRIPTION	DRN	APP'D	DATE

UNLESS OTHERWISE SPECIFIED TOLERANCES:
DECIMALS: .x ±0.5 .xx ±0.25 .xxx ±0.1
ANGULAR: ±0°30`
UNIT: mm
DO NOT SCALE DRAWING

MATERIAL | CONTR. | DESIGN | DATE | CHECK | APPD

FIRST ANGLE PROJECTION

SCALE NTS
SHEET OF

P/N.
TITLE Specifications
USED ON
DWG NO. REV

MST234B483Z0E25.6Q