Unit: MM

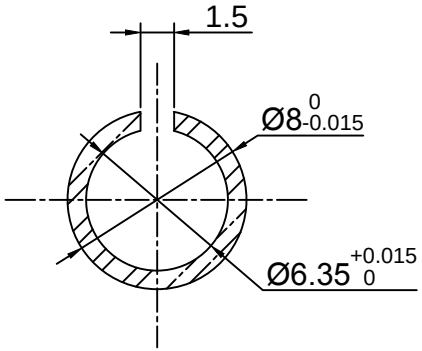

3:1
Ratio

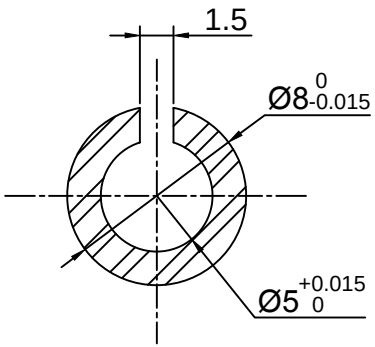

3:1
Ratio

Technical requirement

1. All unmarked reversed angle are C0.5;
2. All unmarked dimension tolerance are from ±0.1mm to ±0.5mm
3. All unmarked shape tolerance are about ±0.1mm

Length: 18±0.5 mm

						Sleeves	HSHS17G08M-M05M HSHS17G08M-M06J
					Date		View:
Designer		Date				Ratio	
Modifier		Date				3:1	
Auditor		Date					
Approver		Date					