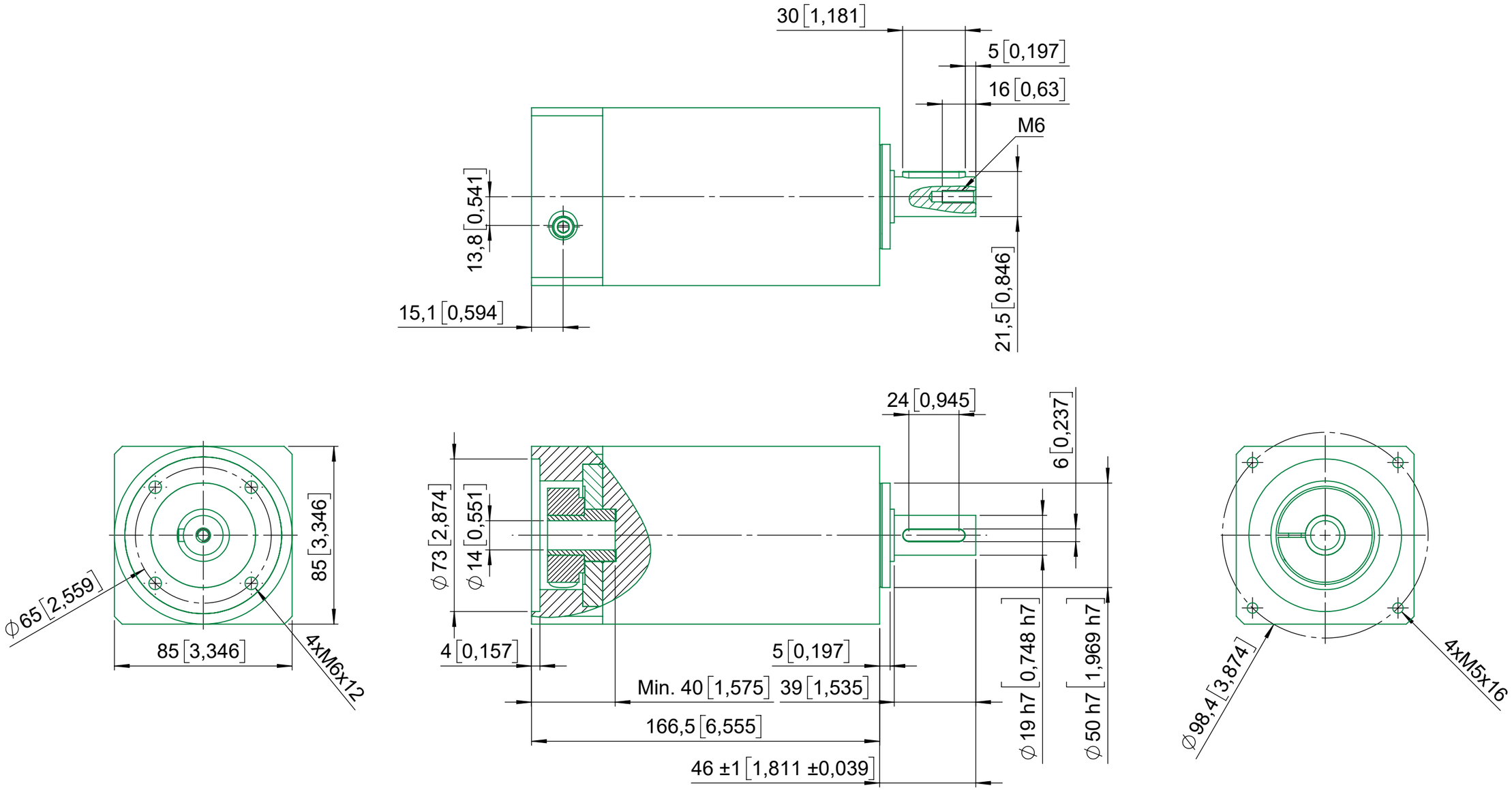

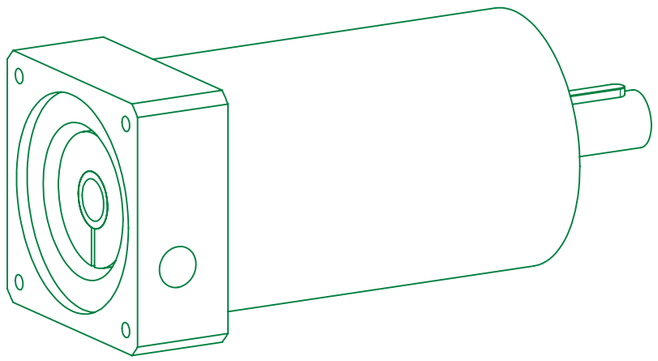

Units: mm[Inch]

JVL A/S
Bregnerødvej 127
DK-3460 Birkerød
Denmark
www.jvl.dk

Description

HTRG08N___MHN34x14M_3stage

File name	HTRG08N___MHN34x14M_3stage_10.slddrw		
Drw	KS	2019-09-15	Version 1.0
Appr	MVJ	2019-09-15	