Ref. No.	Revision	Date	Sign.
-	-	-	-

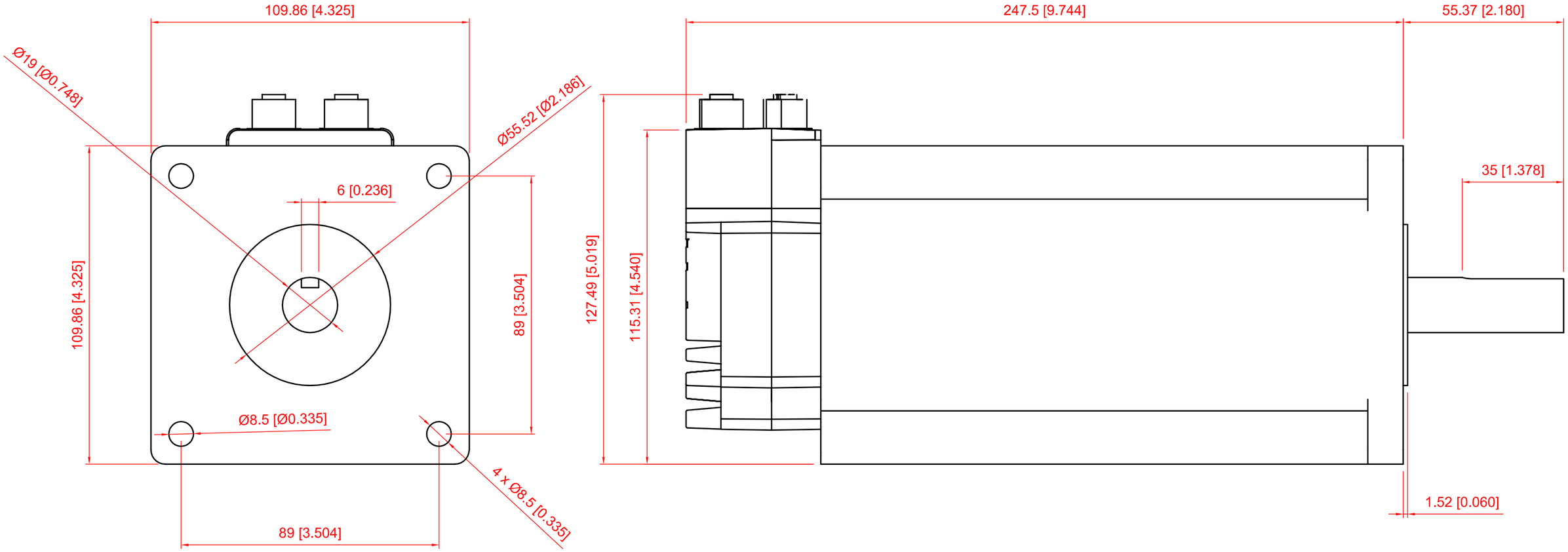

Scale
1:2

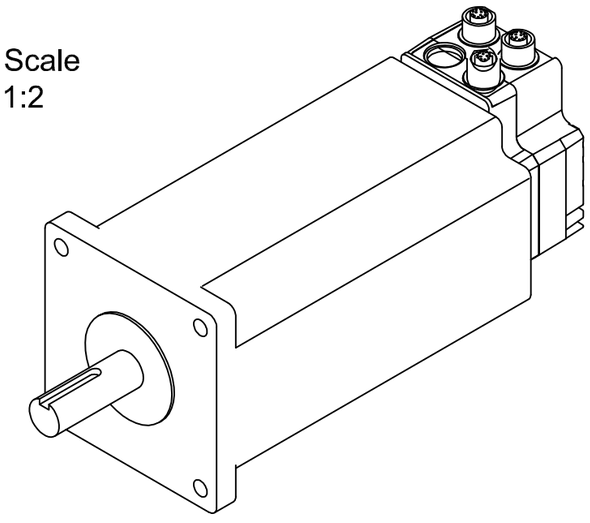

Scale 1 : 1 A2	JVL Industri Elektronik. *Integration in Motion* Blokken 42 DK-3460 Birkerød, Denmark Phone: +45 45 82 44 40 Fax: +45 45 82 55 50 E-mail: jvl@jvl.dk http://www.jvl.dk	Draw No. -
Drawn by	PCR	MIS432
Date	081111	
Checked		
Approved		
		Draw No. -