Ref. No.	Revision	Date	Sign.
-	-	-	-

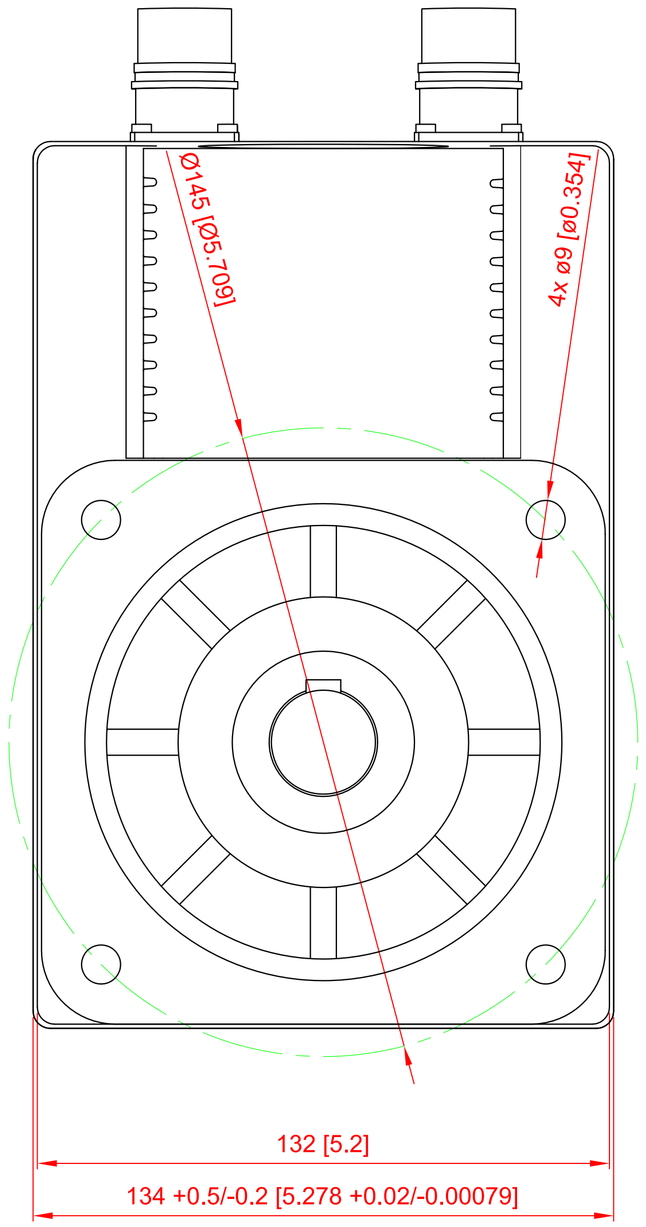

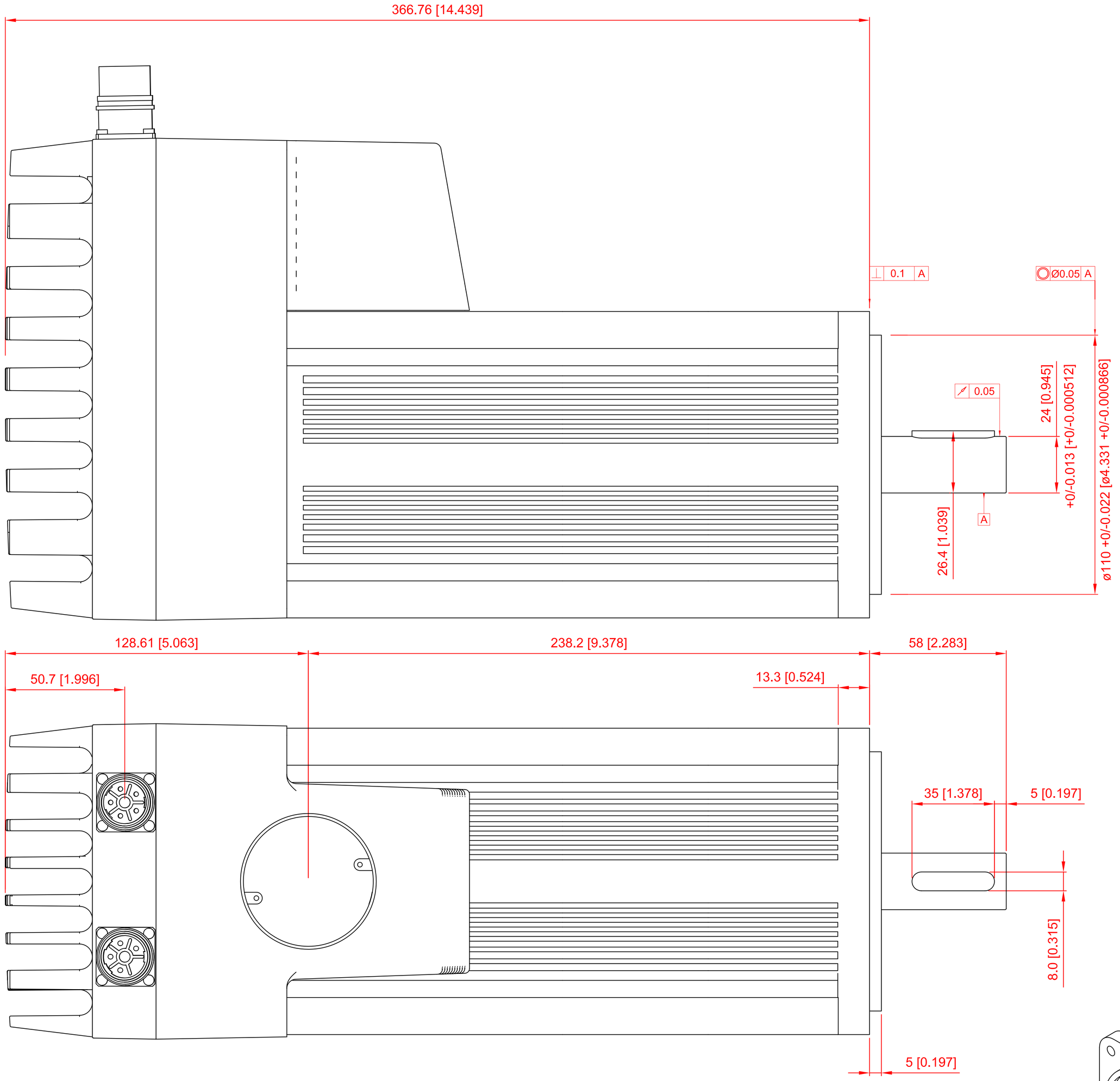

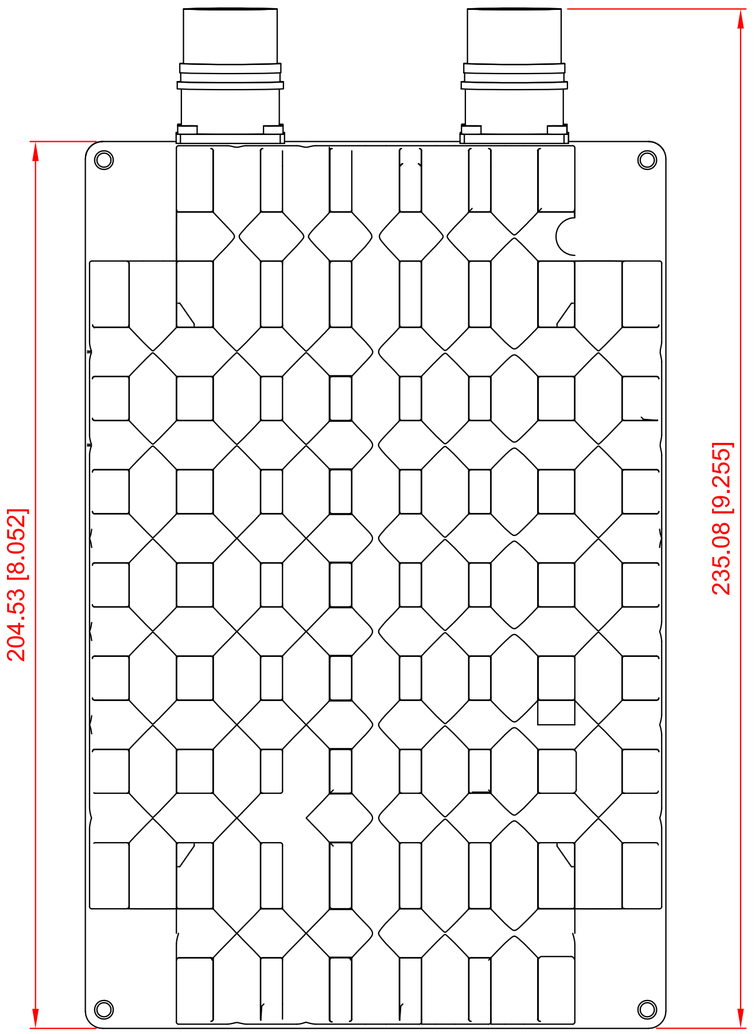

Scale:
1:2

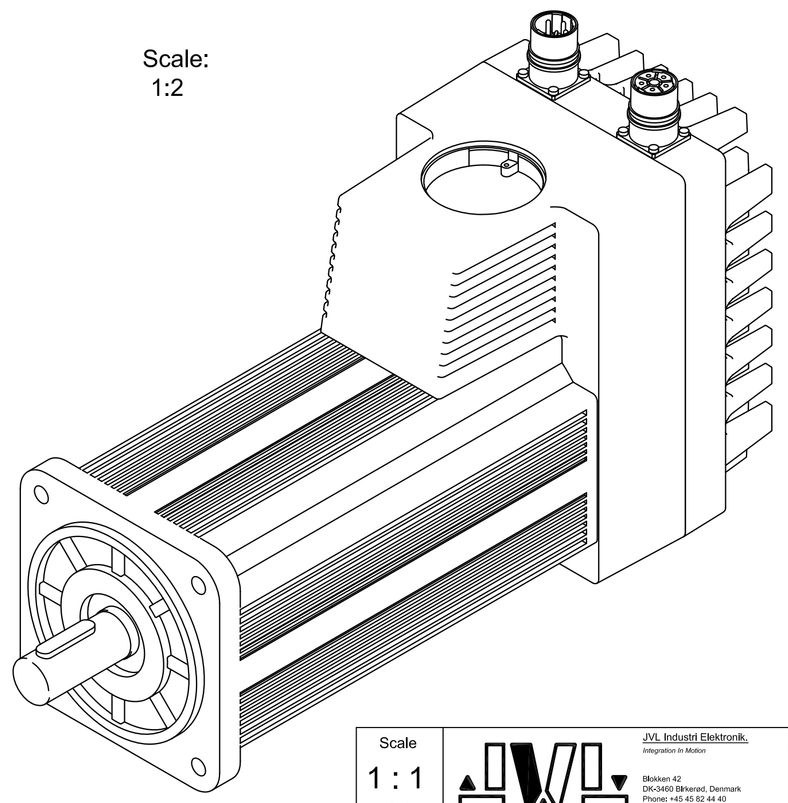

Different connection possibilities, depending on the choice of Expanding module:

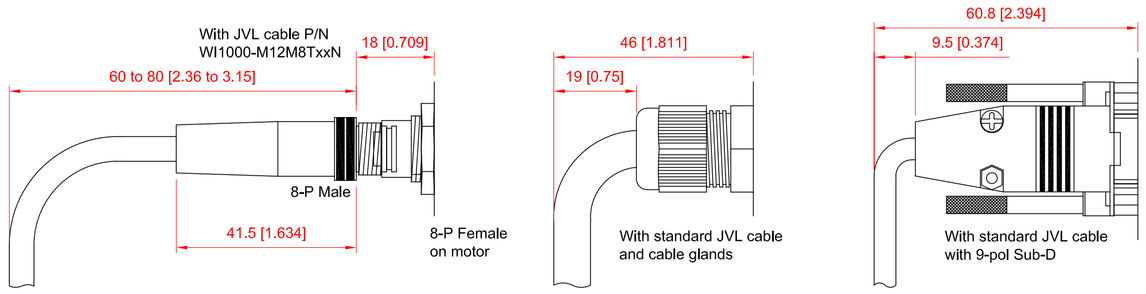

Scale	1 : 1 A1
Drawn by	PCR
Date	19-03-14
Checked	
Approved	
Draw No:	LT0219-13GB

JVL Industri Elektronik.
Integration in Motion
Blokken 42
DK-3460 Birkerød, Denmark
Phone: +45 45 82 44 40
Fax: +45 45 82 55 50
E-mail: J4B@J4.dk http://www.J4.dk

MAC3000-D5 AC Servo motor with intergrated driver and brake3000 W 9.5 Nm

Draw No: LT0219-13GB

Draw No: LT0219-13GB