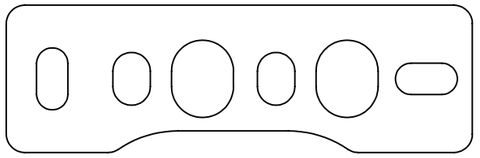

Scale 1:1

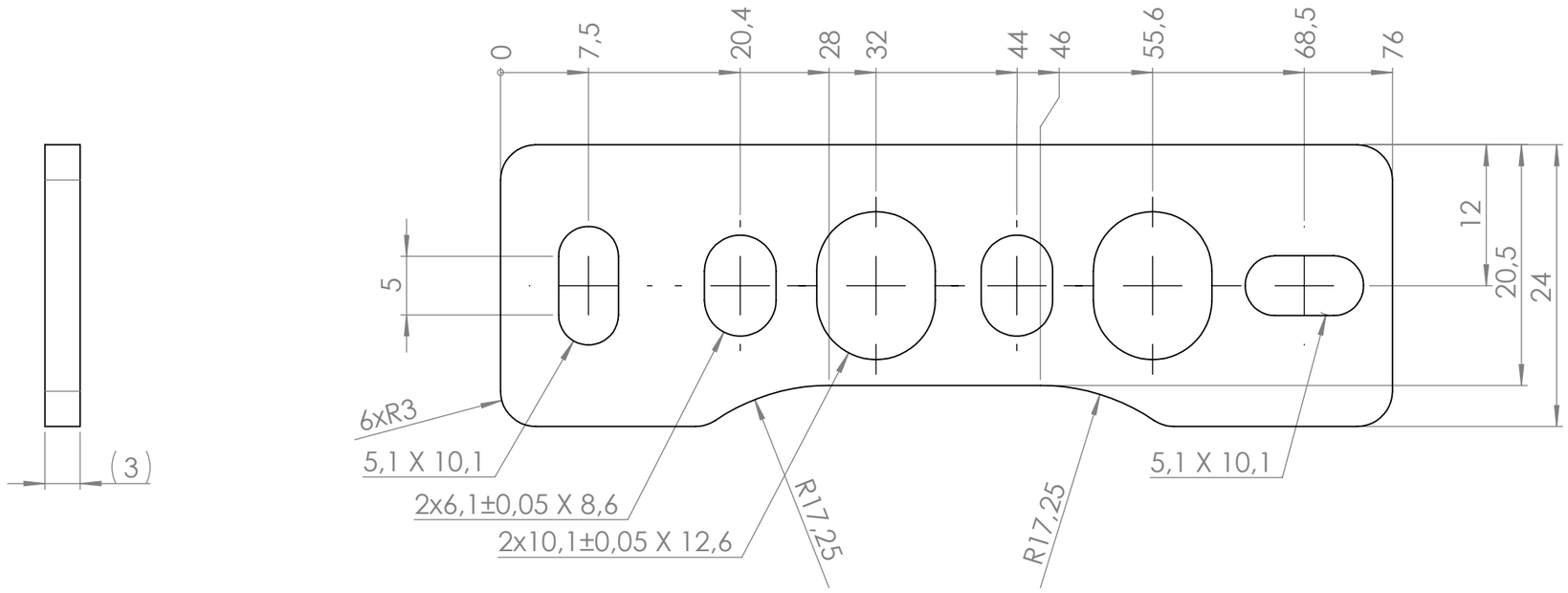

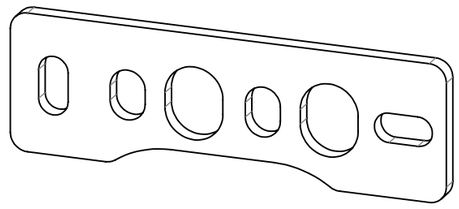

General tolerance: ±0,2

UNLESS OTHERWISE SPECIFIED: DIMENSIONS ARE IN MILLIMETERS SURFACE FINISH: TOLERANCES: LINEAR: ANGULAR:	FINISH: No burrs		DEBURR AND BREAK SHARP EDGES	DO NOT SCALE DRAWING	REVISION 1.0
				JVL A/S Bregnerødvej 127 DK-3460 Birkerød Denmark	
	NAME	SIGNATURE	DATE	TITLE: Universal torque support bracket for MIS23	
DRAWN	KS		26-06-2020		
CHK'D					
APPV'D	MVJ		26-06-2020		
MFG					
Q.A				MATERIAL: 3mm Stainless steel	DWG NO. MM4604 Torque support bracket MIS23 V1_0 — A3
				WEIGHT:	SCALE:2:1 — SHEET 1 OF 1