FROZEN

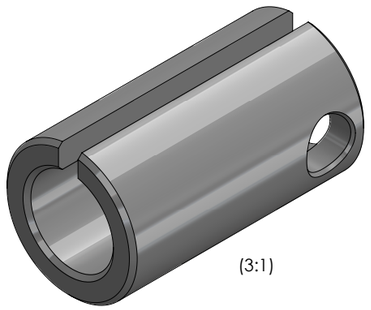

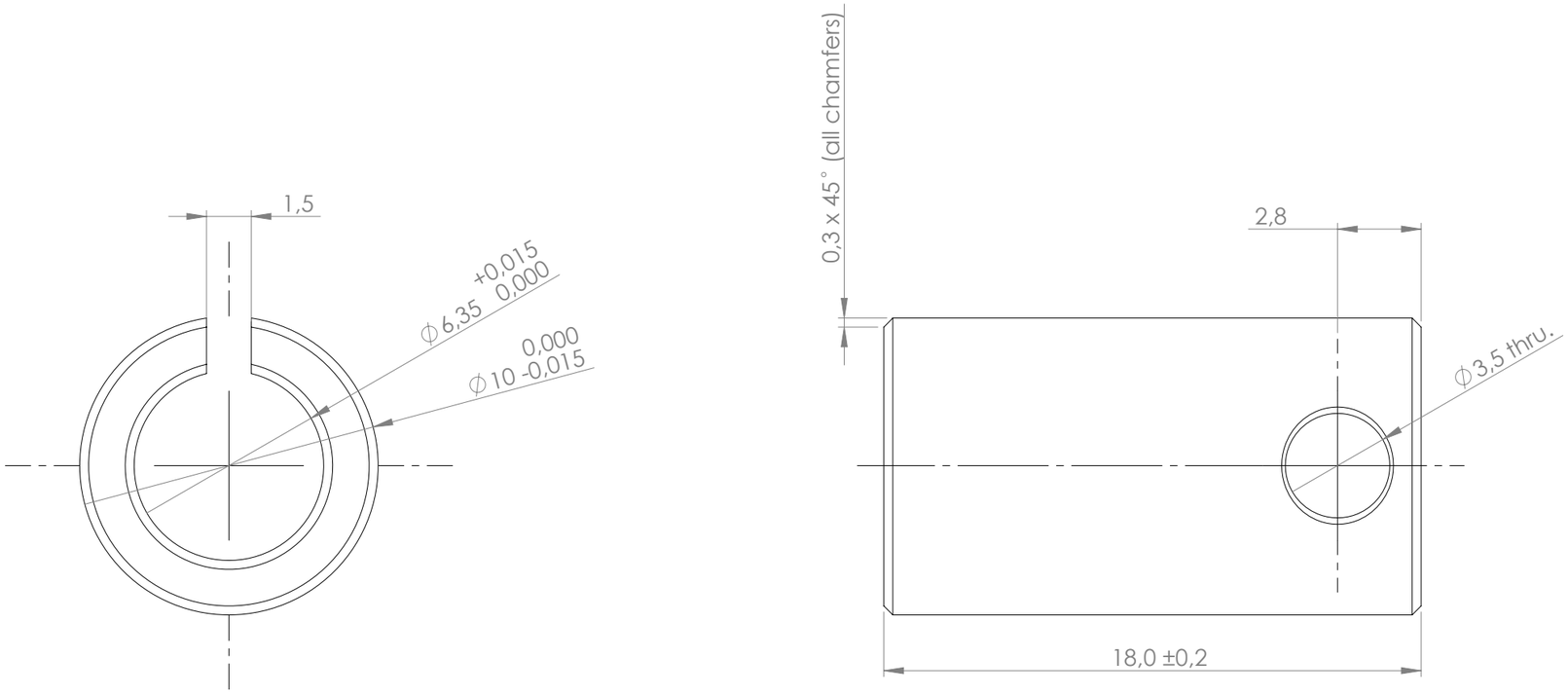

REVISION NOTES:

Rev 01 -> 02

- -Added through hole Ø3,5mm
- -Updated name from "Adapter for shaft for HBAC brake" to "Adapter Sleeve"
- -Changed all chamfers to be same: 0,3mm x 45°
- -Narrowed length tolerance from +/-0,5mm to +/-0,2mm

NOTES

1) Details without dimensions according to 3D file with the same name as this drawing.

PART NAME: Adapter sleeve		**PART NR:** HSHS23G10M-M6J	**REV:** 02
DESC: Adapter Ø6,35 to Ø10 l:18			
MATERIAL: 6061 Alloy		**WEIGHT:** 2.034 g	
SURF. TREAT.: n/a			
MANUFAC. NOTES: NC milled, deburr and dull sharp edges. Part free of oil, grease and other machinig residues.			
	DATE:	**TOLERANCE:** unless specified	
DRW: MIB	2024/04/29		
APP:		+/- 0,1mm	
ERP:			
SHEET FORMAT: A3	**SHEET:** 1 OF 1	**SCALE:** 5:1	
FILE NAME: HSHS23G10M-M6J (6,35x10x18)			

JVL intelligent motors

JVL A/S
Bregnerødvej 127
DK-3460 Birkerød

tel: +45 4582 4440 mail: jvl@jvl.dk