FROZEN

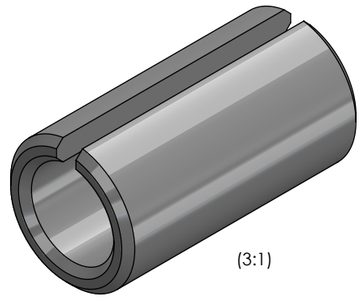

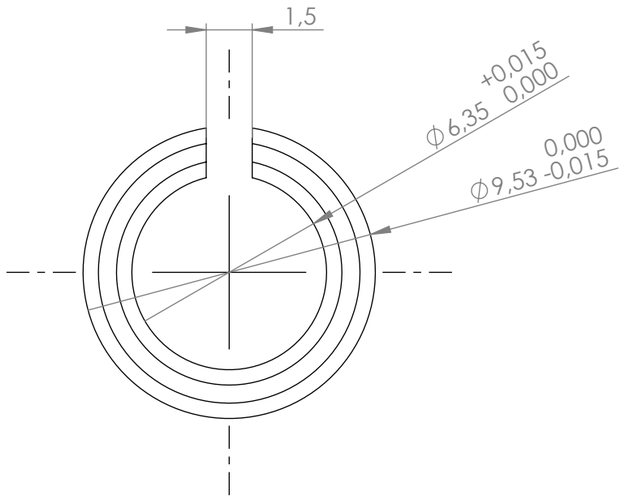

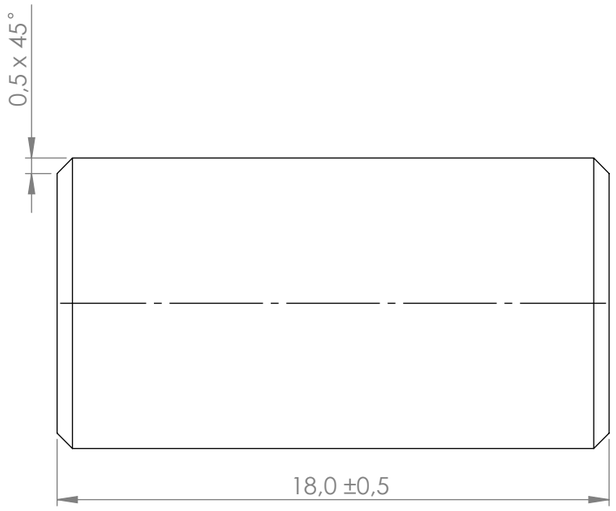

NOTES

1) Details without dimensions according to 3D file with the same name as this drawing.

PART NAME: Adapter for shaft for HBAC brake		**PART NR:** HSHS17G09M-M06J	**REV:** 01
DESC: Adapter Ø6,35 to Ø9,53 l:18			
MATERIAL: 6061 Alloy	**WEIGHT:** 1.779 g		
SURF. TREAT.: n/a			
MANUFAC. NOTES: NC milled, deburr and dull sharp edges. Part free of oil, grease and other machinig residues.			
	DATE:	**TOLERANCE:** unless specified	
DRW: MIB	2024/02/22		
APP:		+/- 0,1mm	
ERP:			
SHEET FORMAT: A3	**SHEET:** 1 OF 1	**SCALE:** 5:1	
FILE NAME: HSHS17G09M-M06J (6,35x9,53x18)			

JVL intelligent motors

JVL A/S
Bregnerødvej 127
DK-3460 Birkerød

tel: +45 4582 4440 mail: jvl@jvl.dk