Ref. No.	Revision	Date	Sign.
-	-	-	-

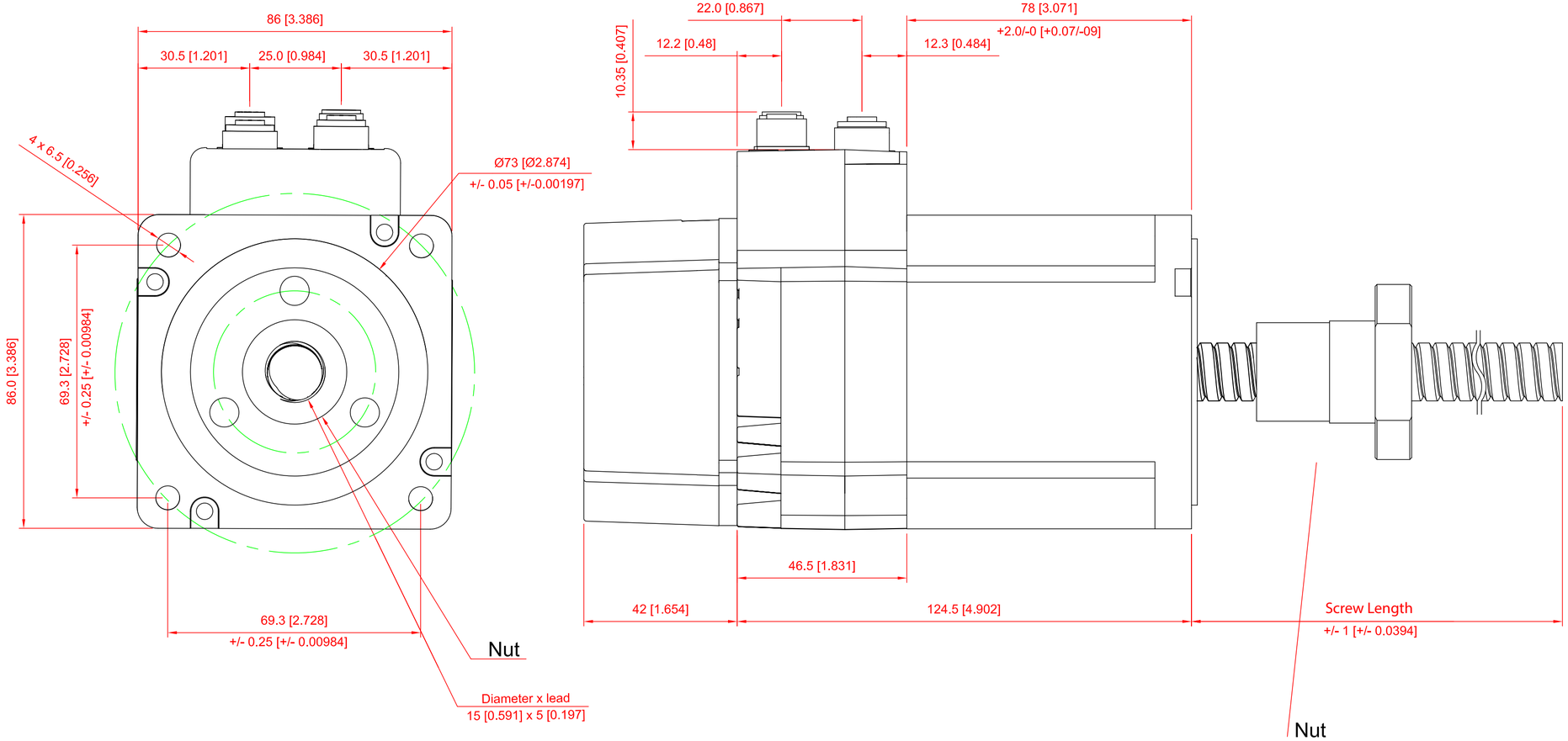

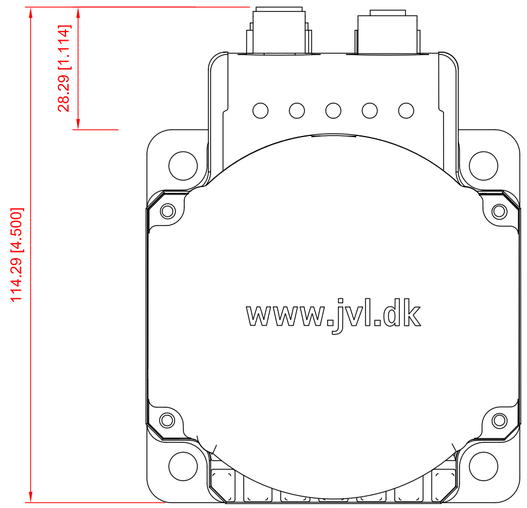

Scale
1 : 2

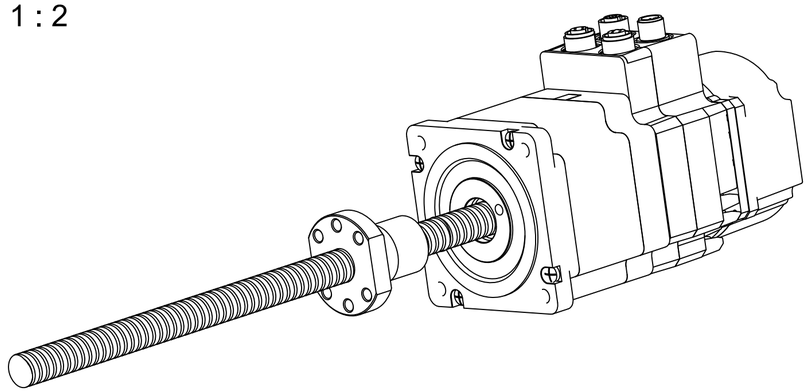

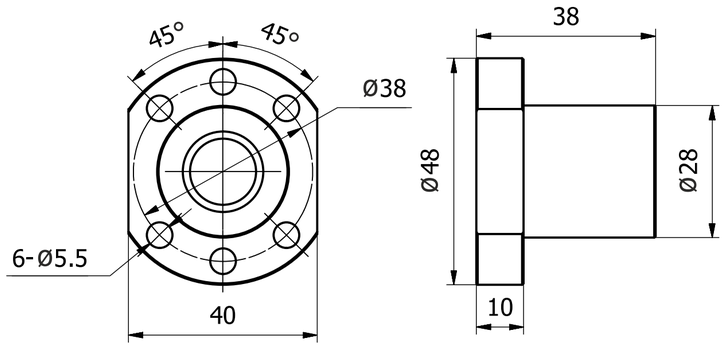

Measurers: mm [inches]
General tolerance: +/- 0.25 [+/-0.01]

Scale	
1 : 1	
A2	
Drawn by	
Date	
Checked	
Approved	
	Draw No.