Ref. No.	Revision	Date	Sign.
-	-	-	-

Stroke code [z]	Stroke mm [inch]	Stroke code [z]	Stroke mm [inch]
A	50 [1.968]	I	350 [13.779]
B	75 [2.952]	J	400 [15.748]
C	100 [3.937]	K	500 [19.685]
D	125 [4.921]	L	600 [23.622]
E	150 [5.905]	M	700 [27.559]
F	200 [7.874]	N	800 [31.496]
G	250 [9.842]	O	900 [35.433]
H	300 [11.811]	P	1000 [39.370]

Shown with stroke code A

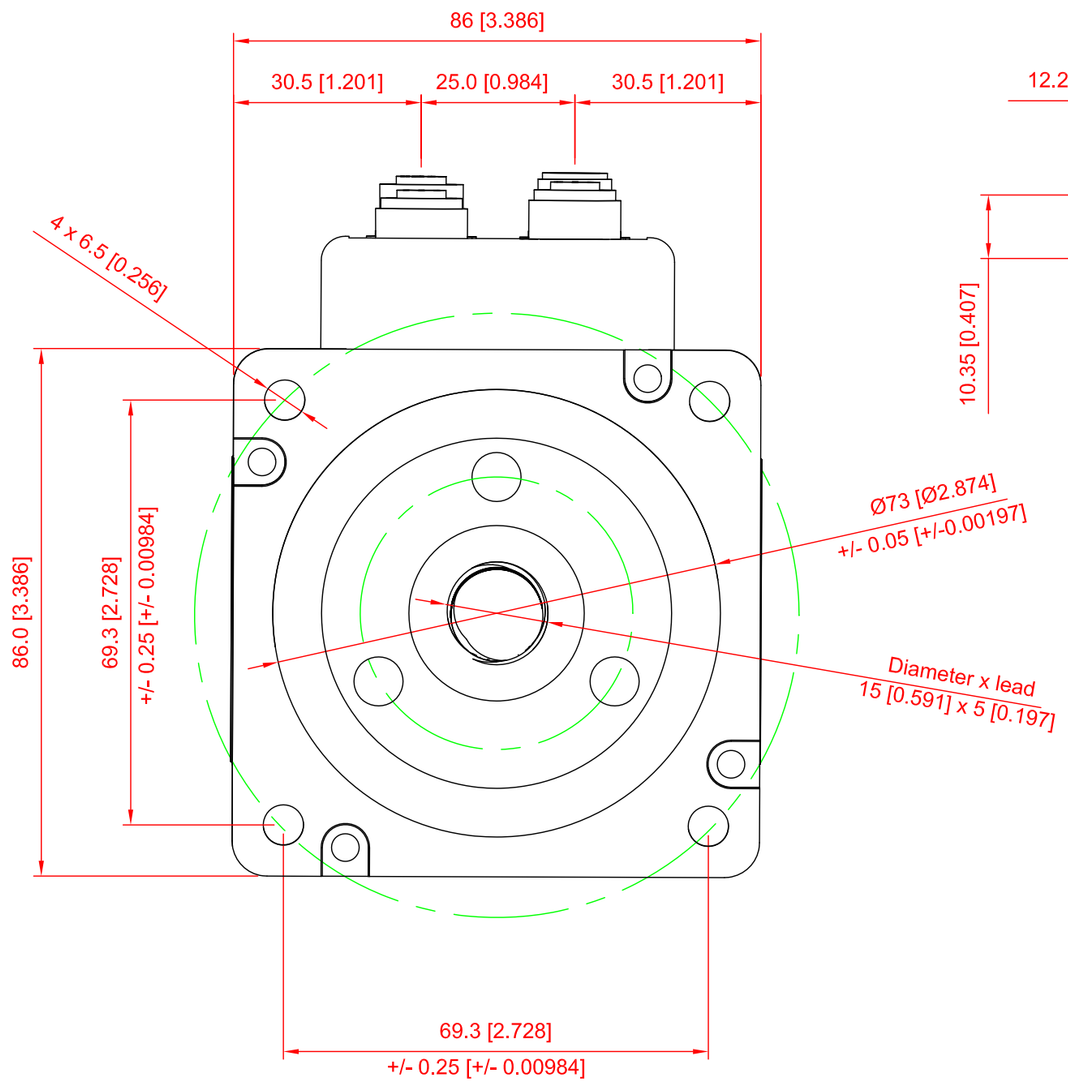

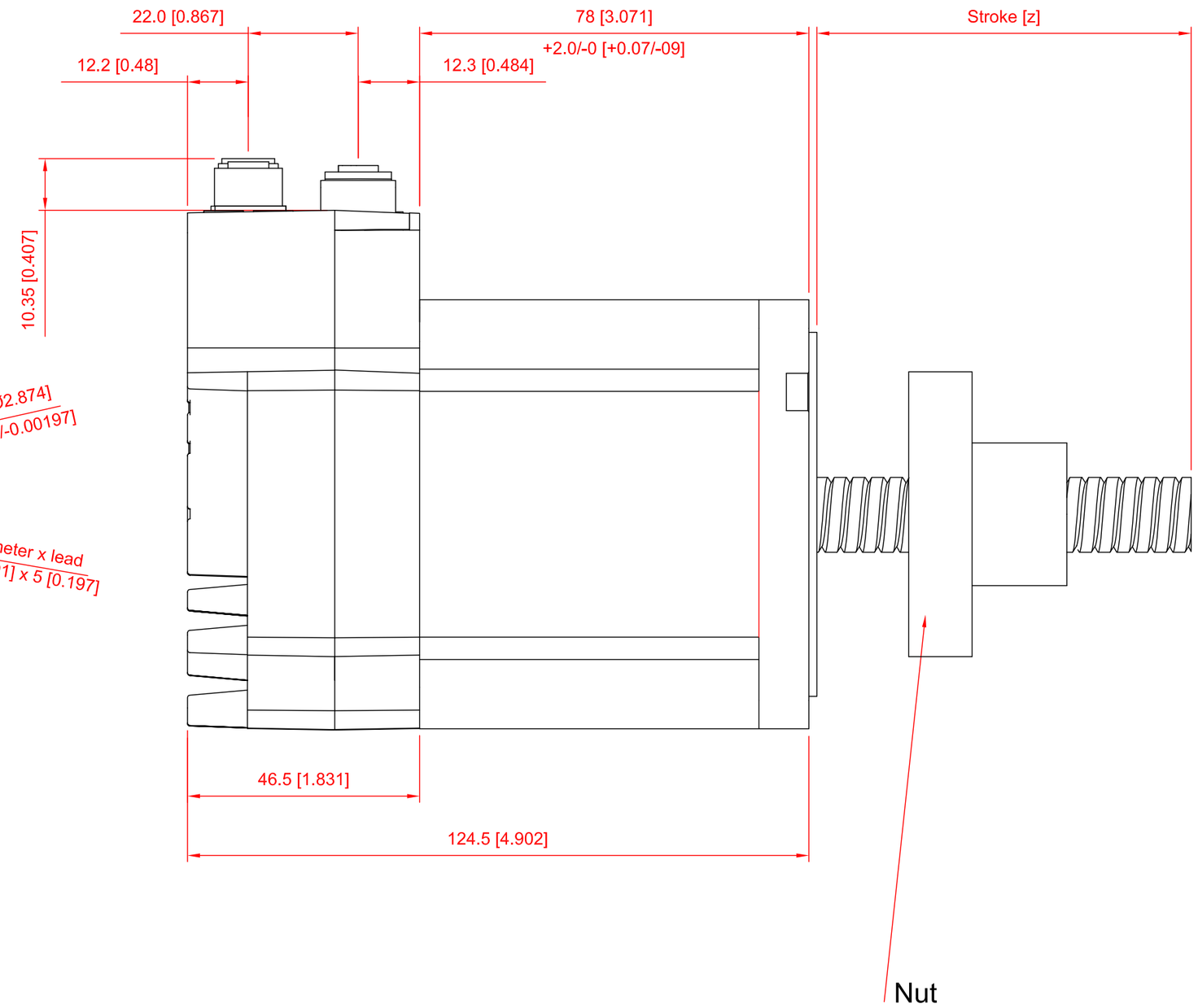

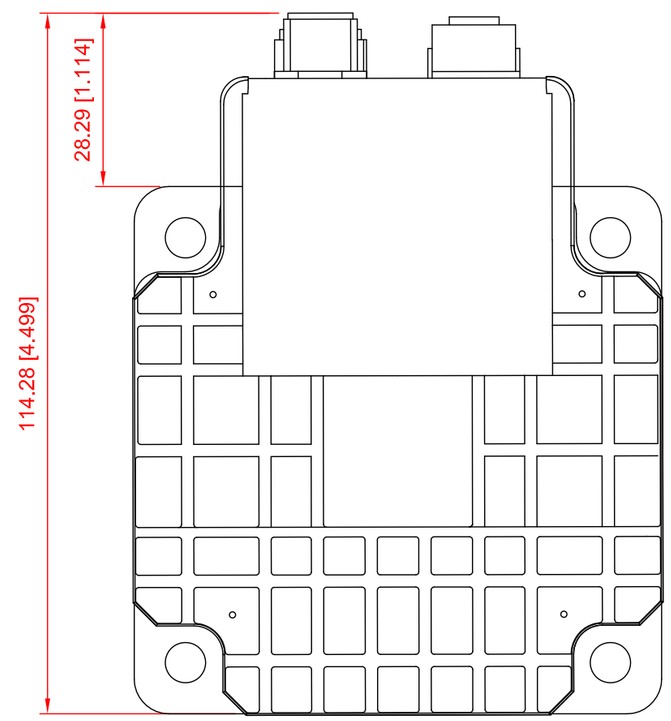

Scale
1 : 2

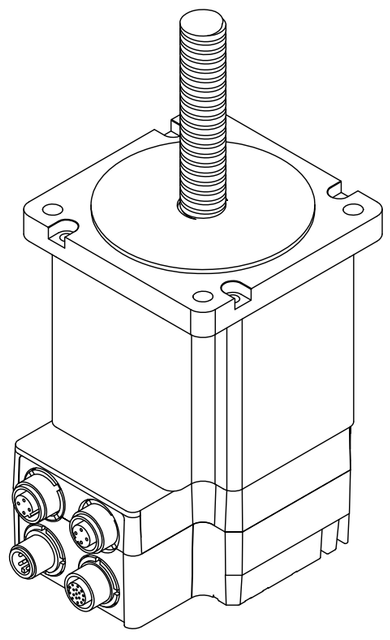

Nut,
scale
1:1

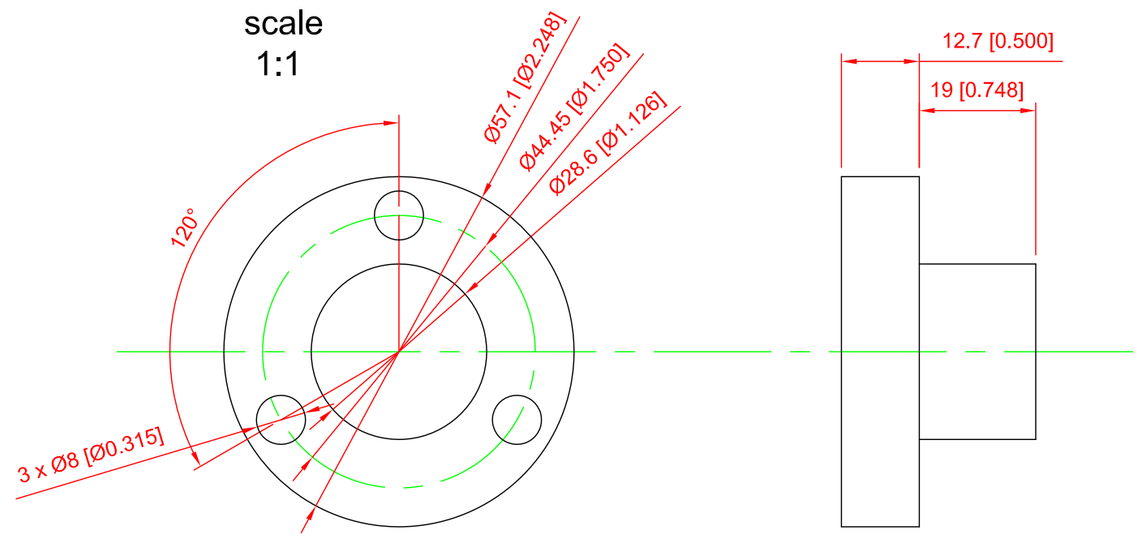

Measurers: mm [inches]
General tolerance: +/- 0.25 [+/-0.01]

Scale 1 : 1 A2	JVL Industri Elektronik. *Integration In Motion* Blokken 42 DK-3460 Birkerød, Denmark Phone: +45 45 82 44 40 Fax: +45 45 82 55 50 E-mail: jvl@jvl.dk http://www.jvl.dk	Draw No. LT0247-11GB
Drawn by	PCR	Int. step mtor with linear actuator NEMA34 with Nut MIL341xEx-xxxx85x
Date	121113	
Checked		
Approved		
		Draw No. LT00247-11GB