Ref. No.	Revision	Date	Sign.
-	-	-	-

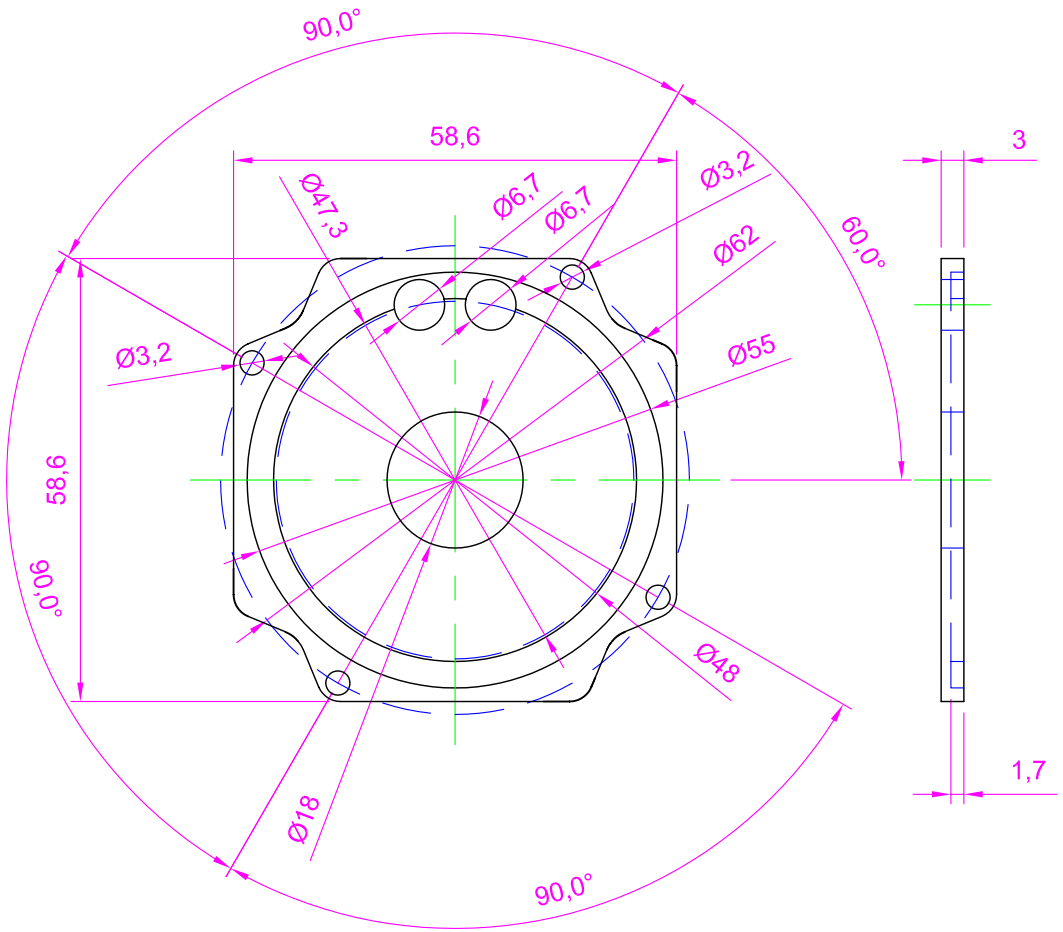

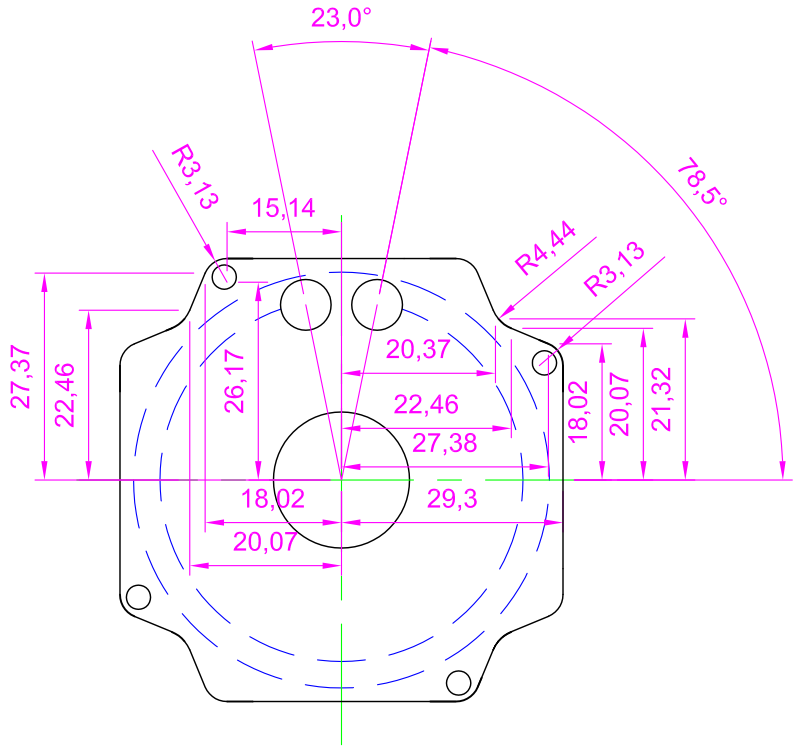

Materiale: G-Etronax PM H

Tolerance:
Ydermål +0/-0.4 mm.
Rest +0.2/-0.2 mm

Scale		
1 : 1	JVL Industri Elektronik. *Integration In Motion*	Draw No. MM3807
A4	Blokken 42 DK-3460 Birkerød, Denmark Phone: +45 45 82 44 40 Fax: +45 45 82 55 50 E-mail: jvl@jvl.dk http://www.jvl.dk	

Drawn by	PCR	MAC400 Isolatorplade
Date	110908	
Checked		
Approved		
		Draw No. MM3807